East to West Axis

WEST

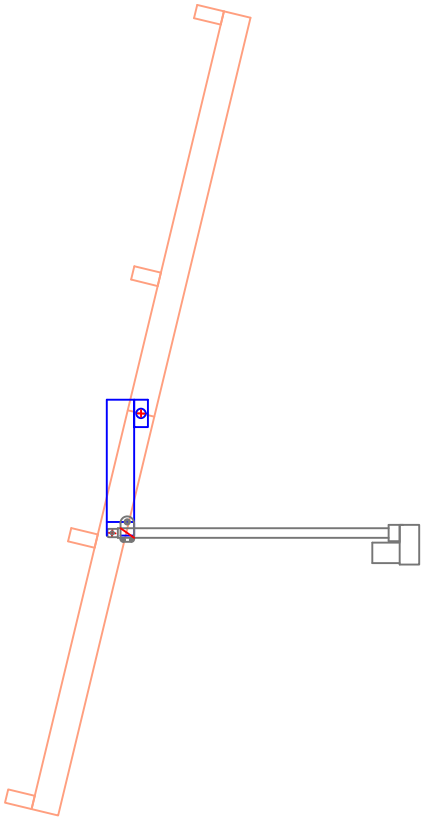

NORTH

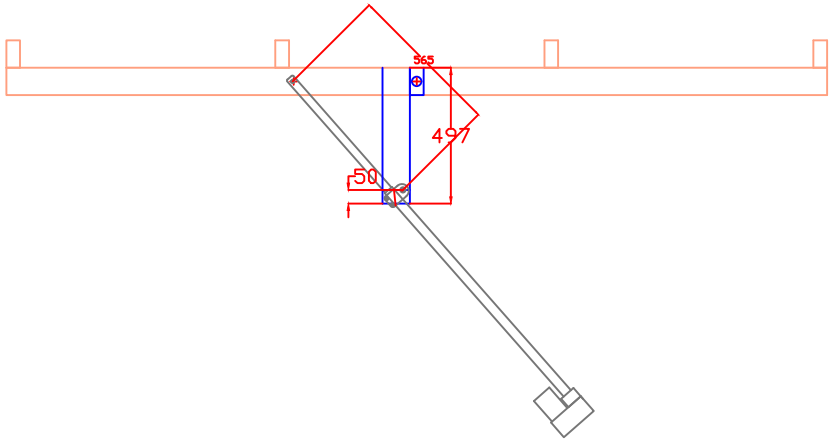

EAST

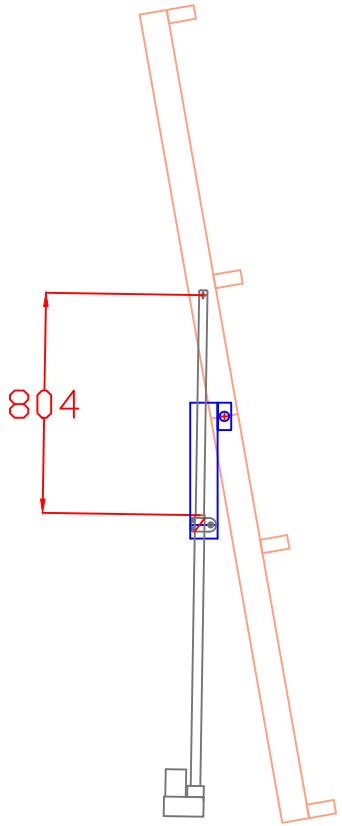

Jim 20/07/2018 10:45 AM Solar Tracker 2012 WAE.dwg